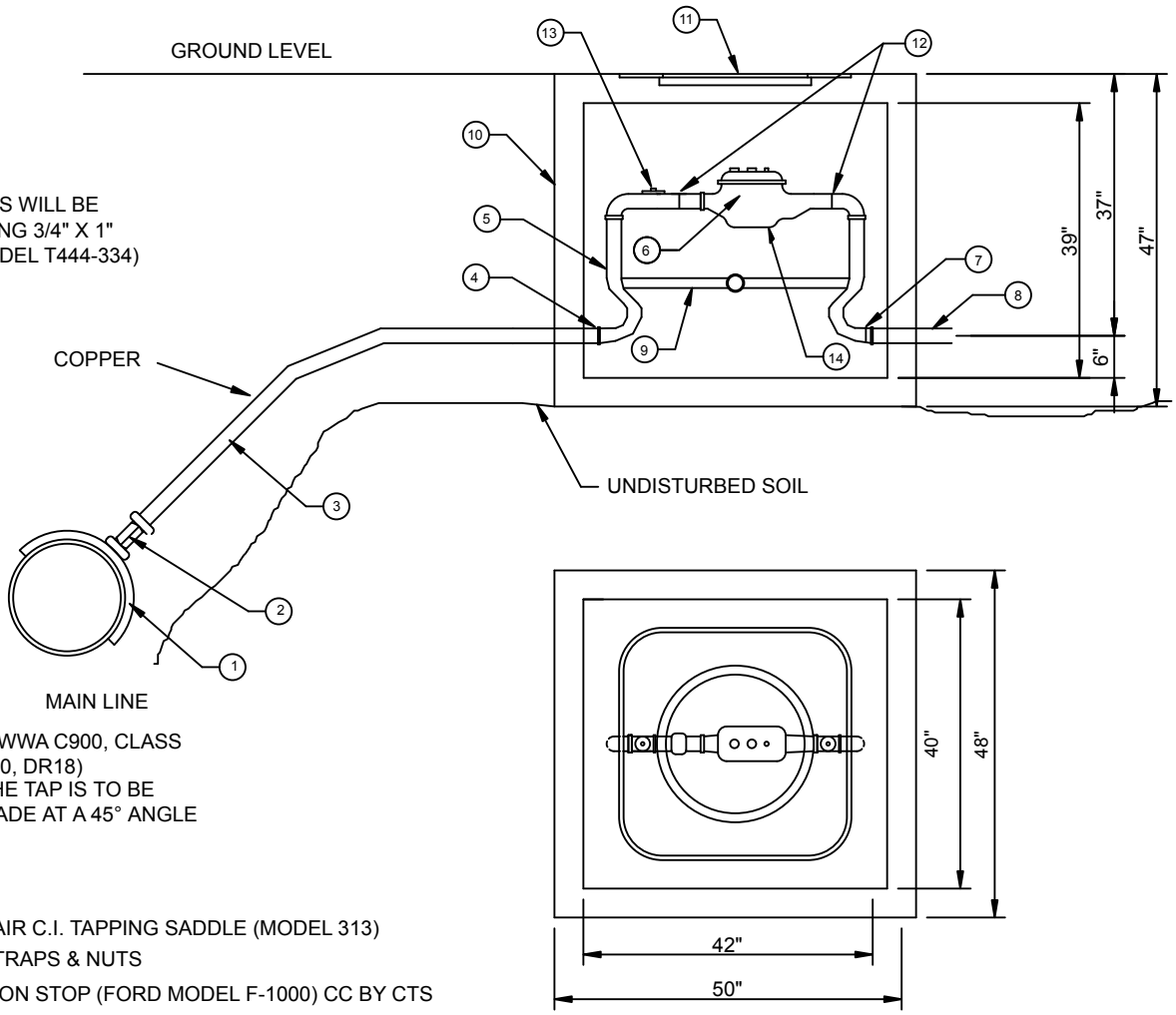

1. SMITH & BLAIR C.I. TAPPING SADDLE (MODEL 313) W/BRASS STRAPS & NUTS
2. CORPORATION STOP (FORD MODEL F-1000) CC BY CTS
3. COPPER SERVICE LINE, ASTM B-88.
4. CTS COMPRESSION FITTING (#50 SERIES FORD CTS, INSERT STIFFENERS REQUIRED)
5. CTS BY DUAL PURPOSE SETTER
   A. 3/4" INSTALLATION - FORD V72-7W-41-33, 7" RISE
   B. 1" INSTALLATION - FORD V74-10W-41-44, 10" RISE
   C. 1 1/2" INSTALLATION - FORD VV7615W1166(C-84-66) WITH MALE ADAPTER, 15" RISE.
   D. 2" INSTALLATION - FORD VV771SW1177(C-84-77) WITH MALE ADAPTER, 15" RISE.
6. 3/4" TO 2" NEPTUNE PRO READ METER
7. DUAL PURPOSE FITTING
8. CUSTOMER SERVICE
9. STABILIZER BAR
10. 3/4" AND 1' INSTALLATION - 18" BROOKS METER CAN
    1 1/2" AND 2" INSTALLATION - 28" x 24" GALVANIZED CAN W/ CAST IRON LID AND RIM
11. FOR STREETS OR PARKING LOTS, ALL METER CANS SHALL BE GALVANIZED CAN W/CAST IRON LID & RIM.
12. METER SPUD
13. METER STOP
14. FREEZE PLATE

REVISION	BY	DATE

3/4" TO 2" METER SETTING

STANDARD DETAILS

CITY OF OWASSO, OKLAHOMA

PUBLIC WORKS DEPARTMENT
ENGINEERING DIVISION

DATE: 05/05 | STANDARD NO. WAT-07

:\STANDARD DETAILS\WATER\ WAT-07